FLOW CONTROLLER

High-pressure Sensors • Series 400

ELEKTRONIK

Monitoring sensors
for high-pressure pipes

- High-pressure resistant up to 600 bar
- Temperature gradient 250 °C/min
- Temperature range up to 120 °C

G 1/2 • G 3/4

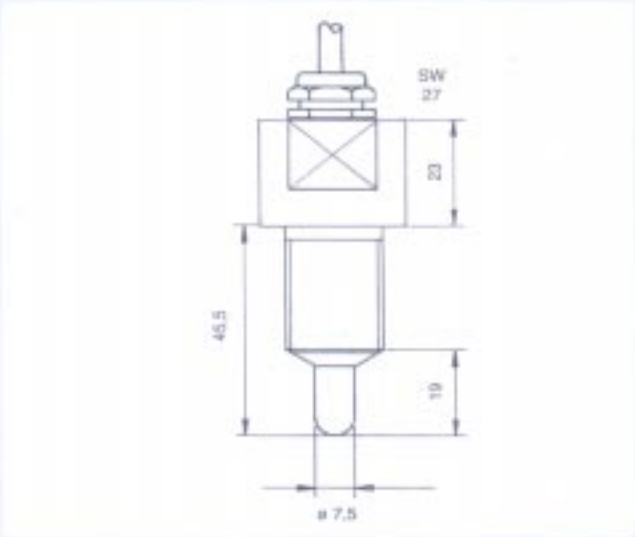

STD... K

G 1/2 • G 3/4

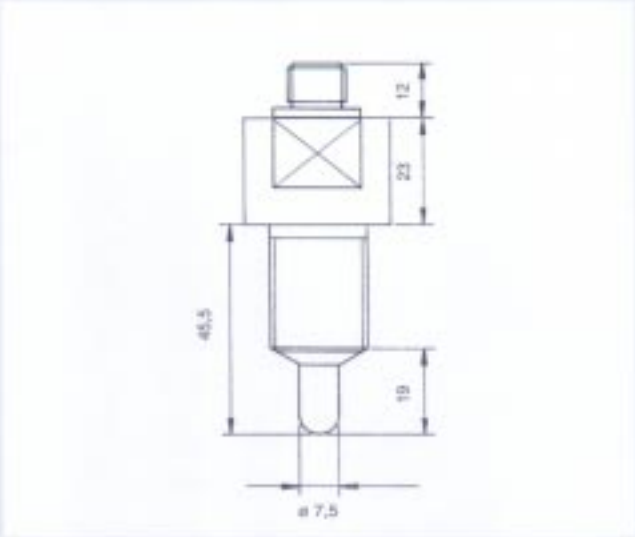

STD... S

TYPE	*ID-NO.*	*DESIGN*		
STD 421 K-A4	P10611	G 1/2	stainless steel A4	fixed cable
STD 421 S-A4	P10613	G 1/2	stainless steel A4	plug M12
STD 431 K-A4	P10615	G 3/4	stainless steel A4	fixed cable
STD 431 S-A4	P10617	G 3/4	stainless steel A4	plug M12

Combination sensor-amplifier

	SKZ 400...	SKM 420...	SKV 480...
STD...	●	●	●

Note
Different designs, materials or electrical data are available on request.

FLOW CONTROLLER

High-pressure Sensors • Series 400

EGE ELEKTRONIK

Technical Data

	STD...	
Detection range		
		Nominal flow
Water	1...150 cm/s	20 cm/s
Oil	3...300 cm/s	60 cm/s
Temperature range	-20...+80 °C (medium),	120 °C on request
Temperature gradient	250 °C/min	
Temperature-step time	typ. 12 s	
Standby time	typ. 8 s	(2...15 s)
Switching delay on	typ. 2 s	(1...13 s)
Switching delay on	typ. 2 s	(1...15 s)
Compressive strength	400 bar pressure change 600 bar static pressure	
Protection (EN 60529)	IP 68 (fixed-cable) IP 67 (plug)	
Material Sensor	stainless steel A4 (1.4571)	
Connection		
Plug	Universal plug system	
Fixed-cable	2 m PVC-cable 4 x 0.25 mm²	

ACCESSORIES

SLG 4-2	Z00445	cable plug casing M12	DC	straight	2 m PVC-cable	4 x 0.25 mm²
SLW 4-2	Z00446	cable plug casing M12	DC	angled	2 m PVC-cable	4 x 0.25 mm²
SLG 4-5	Z00449	cable plug casing M12	DC	straight	5 m PVC-cable	4 x 0.25 mm²
SLW 4-5	Z00450	cable plug casing M12	DC	straight	5 m PVC-cable	4 x 0.25 mm²

Connection

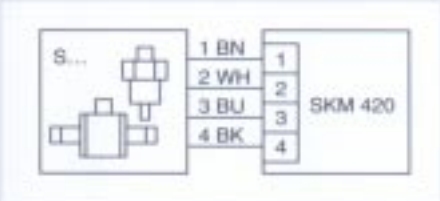

Code: BK = black BN = brown BU = blue GN = green YE = yellow GY = grey PK = pink WH = white